BHV

AC VENTILATION UNITS
Forward Curved

BHV (double inlet fans) can be manufactured for the flow rates between 500 and 50000 m3/h.
Unit panels are covered with 20mm polyurethane. Max. efficiency with low energy. Acustic isolated to noise and works vibration-free.

Technical Drawing

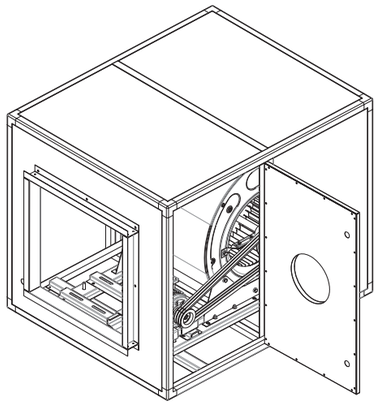

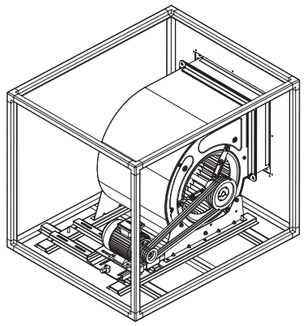

MATERIAL	: Housing is made of galvanized sheet metal and covered with 20mm polyurethane, aluminium cell, forward curved fan is made of galvanized sheet metal.
INSULATION CLASS	: Class F
DIRECTIVE	: EN 60335-1, EN 60335-2-80
SPEED CONTROL	: Speed is adjusted using belt pulley
APPLICATION AREAS	: Workplaces, offices, factories, hospitals, restaurants, meeting rooms, supermarkets, shopping centers etc.

Accessories

BSC-F

BDEB

BDH

BDKS

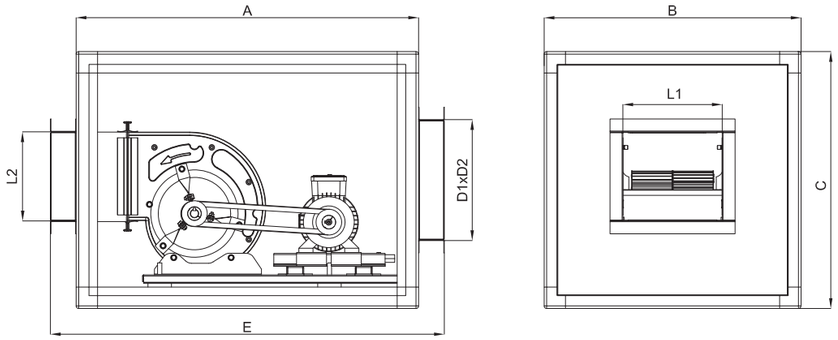

TYPE	A	B	C	D1	D2	E	L1	L2
BHV 7	800	600	600	280	280	920	232	208
BHV 9	850	650	650	350	350	970	298	262
BHV 10	900	750	750	380	380	1020	331	289
BHV 12	1000	800	800	450	450	1120	395	341
BHV 15	1100	900	900	520	520	1220	471	404
BHV 18	1250	1050	1050	600	600	1370	557	478
BHV 20	1500	1400	1400	1000	700	1620	638	638
BHV 22	1750	1700	1700	1200	800	1870	715	715
BHV 25	1850	1800	1800	1400	900	1970	801	801

Dimensions are in (mm)

INLET - OUTLET POSITIONS

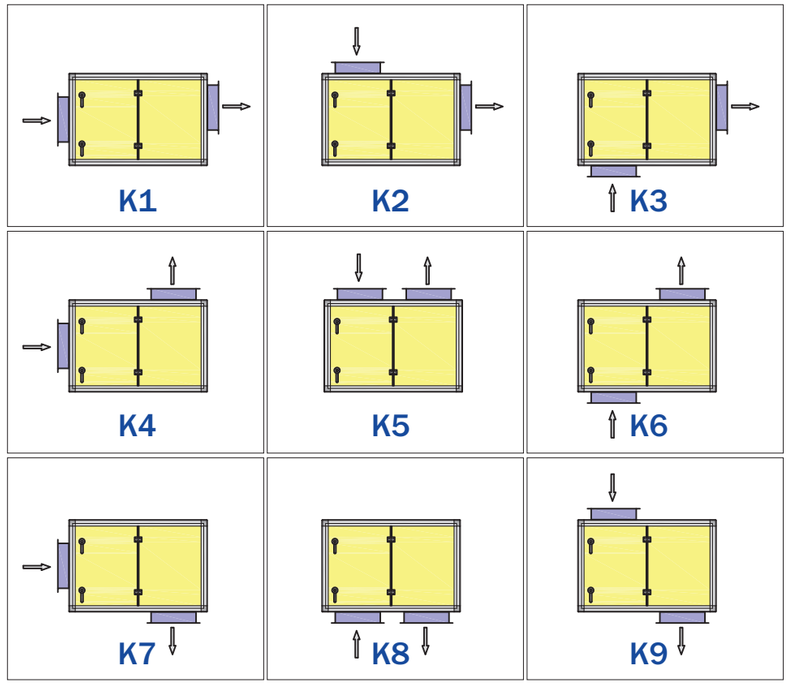

TYPE	VOLTAGE V	FREQUENCY Hz	POWER Kw	SPEED rpm	AIR FLOW m³/h	PRESSURE Pa	SOUND PRESSURE LEVEL dB(A)	WEIGHT kg
BHV 7 - 0,18	220/380	50	0.18	1000	1600	170	48	64
BHV 7 - 0,25	220/380	50	0.25	1200	1825	240	49	65
BHV 7 - 0,37	220/380	50	0.37	1400	2100	320	51	66
BHV 7 - 0,55	220/380	50	0.55	1600	2350	420	54	68
BHV 7 - 0,75	220/380	50	0.75	1800	2600	540	57	69
BHV 9 - 0,25	220/380	50	0.25	850	2300	220	50	74
BHV 9 - 0,37	220/380	50	0.37	960	2800	280	52	75
BHV 9 - 0,55	220/380	50	0.55	1060	3200	320	53	76
BHV 9 - 0,75	220/380	50	0.75	1200	3500	430	58	77
BHV 9 - 1,1	220/380	50	1.1	1340	4100	500	59	80
BHV 10 - 0,25	220/380	50	0.25	660	2800	125	50	81
BHV 10 - 0,37	220/380	50	0.37	800	3300	220	50	82
BHV 10 - 0,55	220/380	50	0.55	880	3800	250	52	83
BHV 10 - 0,75	220/380	50	0.75	1000	4200	300	55	84
BHV 10 - 1,1	220/380	50	1.1	1130	4800	380	58	87
BHV 10 - 1,5	220/380	50	1.5	1270	5300	480	60	89
BHV 12 - 0,37	220/380	50	0.37	600	4200	150	52	109
BHV 12 - 0,55	220/380	50	0.55	700	4600	210	52	110
BHV 12 - 0,75	220/380	50	0.75	800	5100	290	53	111
BHV 12 - 1,1	220/380	50	1.1	880	5700	330	56	114
BHV 12 - 1,5	220/380	50	1.5	1020	6400	440	58	115
BHV 12 - 2,2	220/380	50	2.2	1140	7400	550	61	120
BHV 15 - 0,55	220/380	50	0.55	530	4700	170	53	127
BHV 15 - 0,75	220/380	50	0.75	560	6000	190	53	128
BHV 15 - 1,1	220/380	50	1.1	630	7000	250	55	129
BHV 15 - 1,5	220/380	50	1.5	700	7800	300	57	131
BHV 15 - 2,2	220/380	50	2.2	800	9000	390	60	135
BHV 15 - 3	220/380	50	3	880	10000	480	62	139
BHV 15 - 4	380	50	4	970	11000	580	65	145
BHV 18 - 0,75	220/380	50	0.75	460	7500	190	52	173
BHV 18 - 1,1	220/380	50	1.1	510	9000	250	55	174
BHV 18 - 1,5	220/380	50	1.5	540	10800	260	57	175
BHV 18 - 2,2	220/380	50	2.2	610	12500	320	57	176
BHV 18 - 3	220/380	50	3	680	14000	400	59	177
BHV 18 - 4	380	50	4	750	15000	500	62	180
BHV 18 - 5,5	380	50	5.5	850	16500	650	65	188
BHV 18 - 7,5	380	50	7.5	930	18000	780	68	192
BHV 20	380	50	11	725	22000	400	65	285
BHV 22	380	50	15	765	27000	400	67	335
BHV 25	380	50	18.5	610	38000	400	68	380

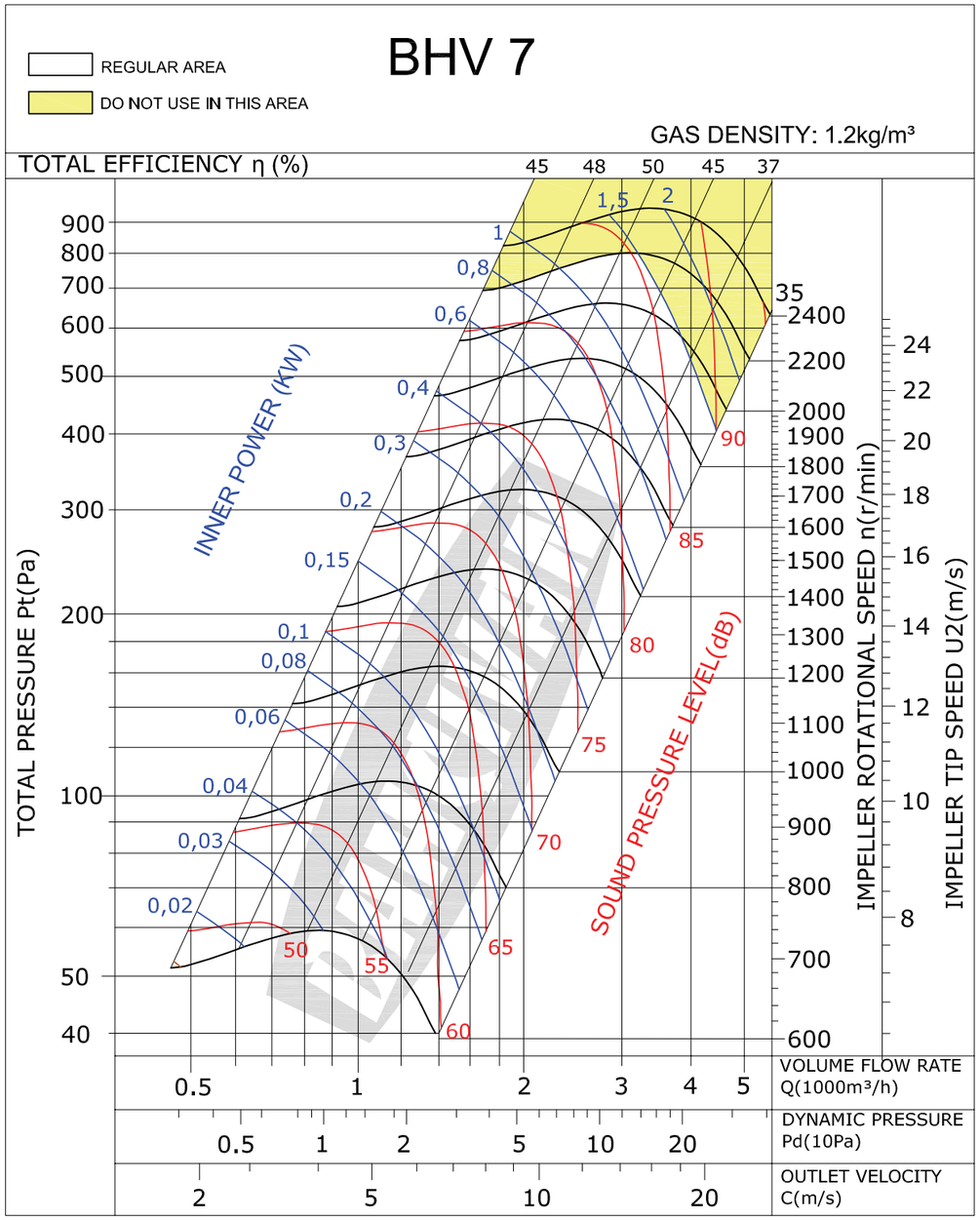

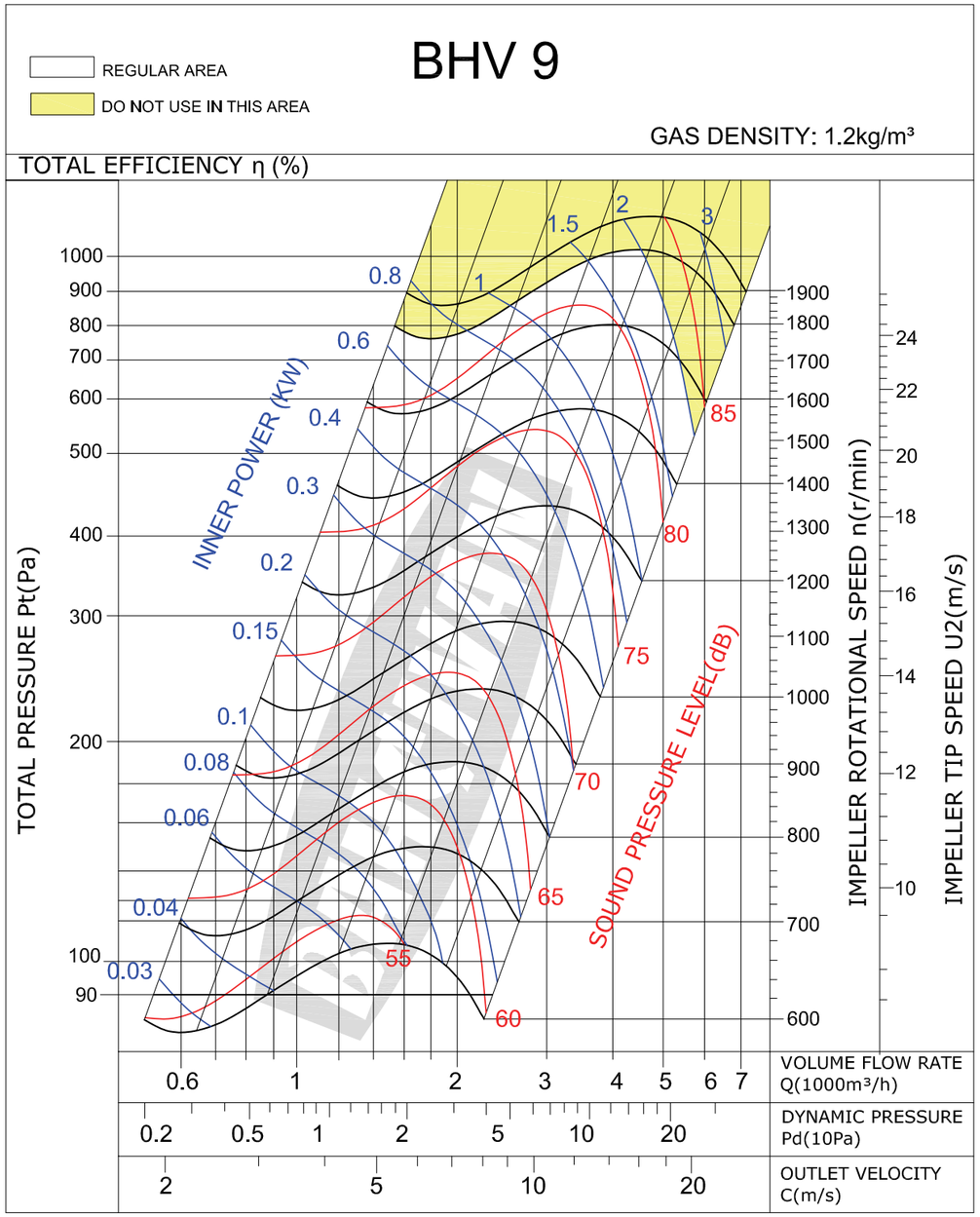
BHV 9
REGULAR AREA
DO NOT USE IN THIS AREA
GAS DENSITY: 1.2kg/m³
TOTAL EFFICIENCY η (%)
TOTAL PRESSURE Pt(Pa)
INNER POWER (KW)
SOUND PRESSURE LEVEL(dB)
IMPELLER ROTATIONAL SPEED n(r/min)
IMPELLER TIP SPEED U2(m/s)
VOLUME FLOW RATE Q(1000m³/h)
DYNAMIC PRESSURE Pd(10Pa)
OUTLET VELOCITY C(m/s)

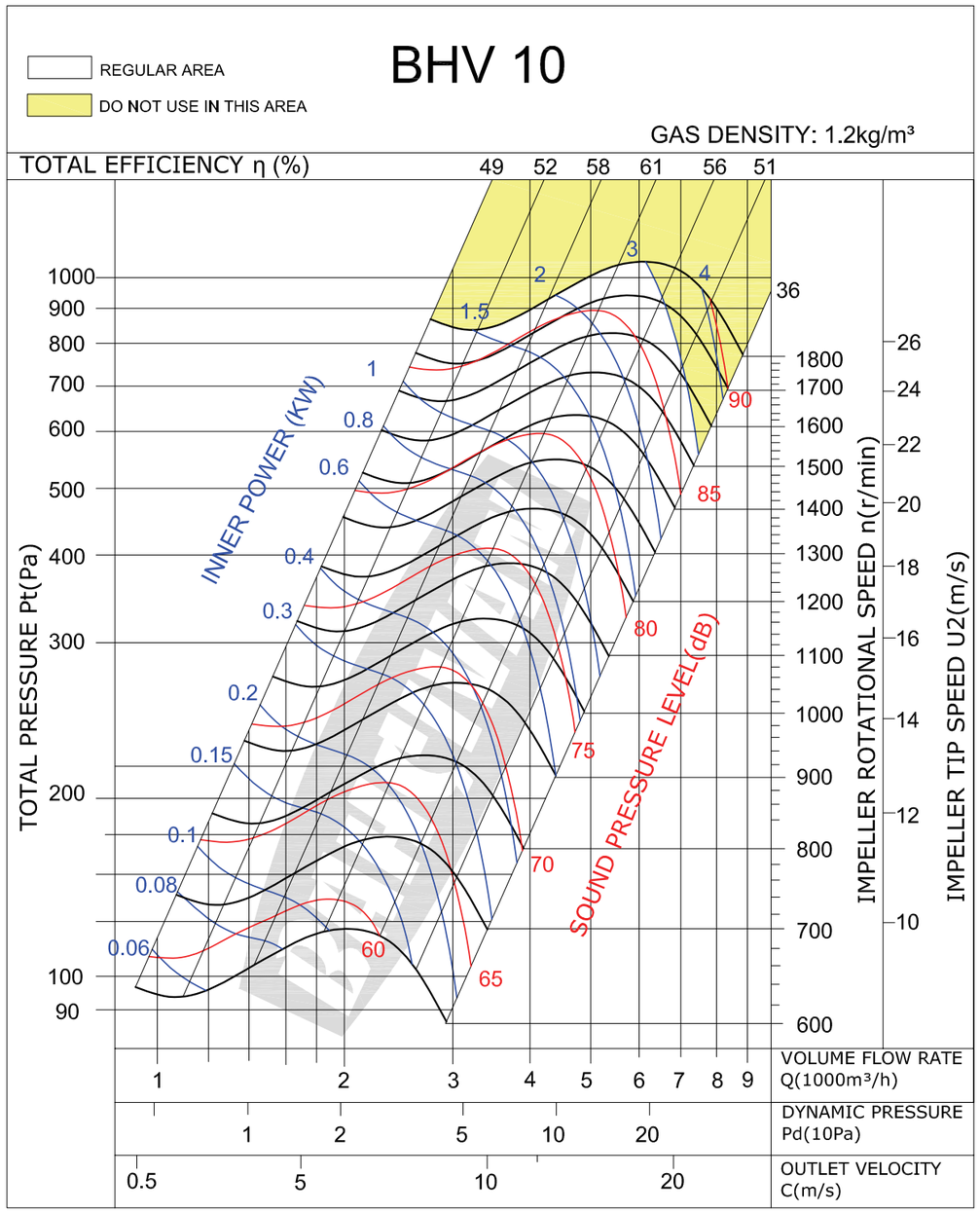
BHV 10
REGULAR AREA
DO NOT USE IN THIS AREA
GAS DENSITY: 1.2kg/m³
TOTAL EFFICIENCY η (%)
49 52 58 61 56 51
TOTAL PRESSURE Pt(Pa)
INNER POWER (KW)
SOUND PRESSURE LEVEL(dB)
IMPELLER ROTATIONAL SPEED n(r/min)
IMPELLER TIP SPEED U2(m/s)
VOLUME FLOW RATE Q(1000m³/h)
DYNAMIC PRESSURE Pd(10Pa)
OUTLET VELOCITY C(m/s)

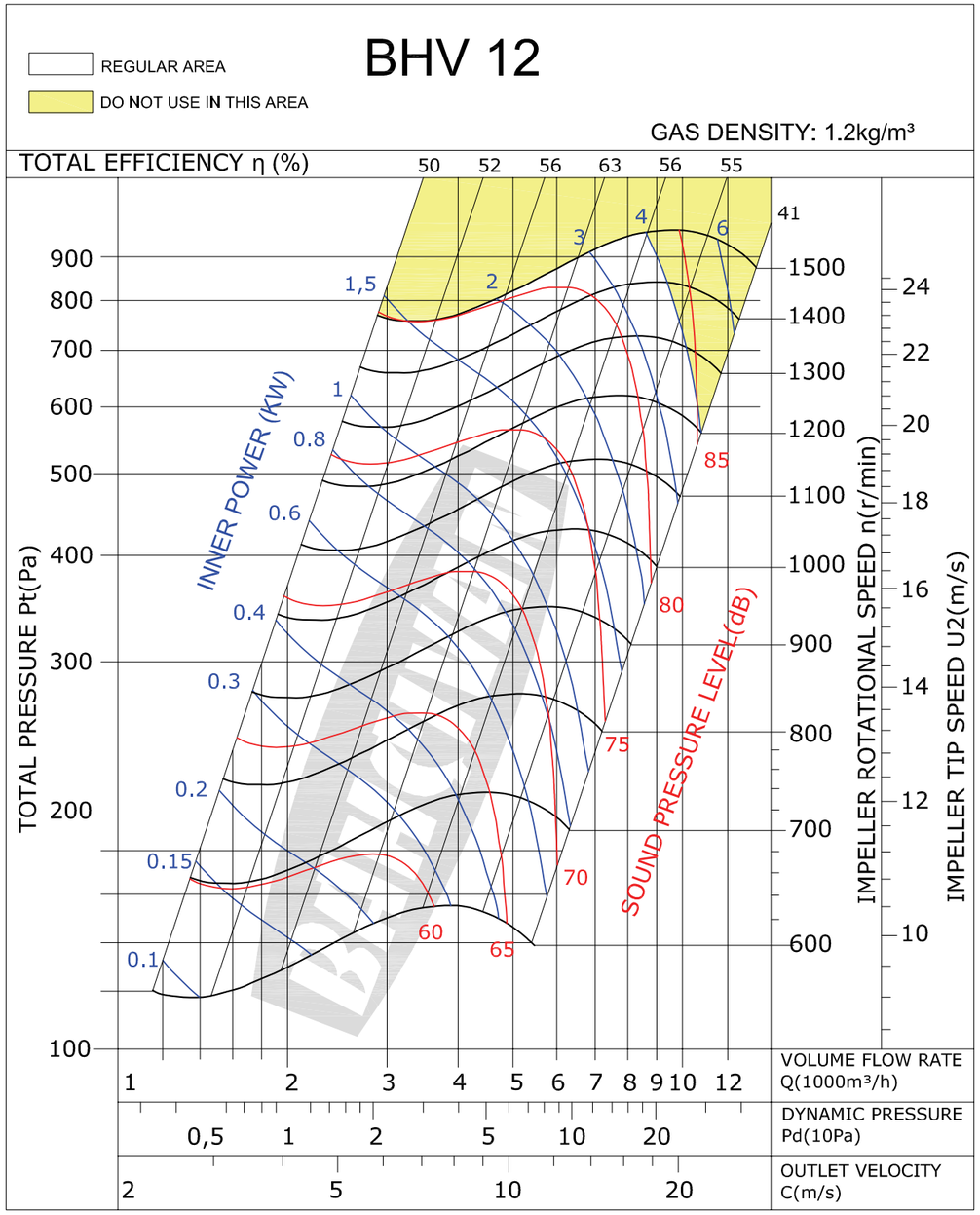
REGULAR AREA
DO NOT USE IN THIS AREA
BHV 12
GAS DENSITY: 1.2kg/m³
TOTAL EFFICIENCY η (%)
50 52 56 63 56 55
41
TOTAL PRESSURE Pt(Pa)
INNER POWER (KW)
SOUND PRESSURE LEVEL(dB)
IMPELLER ROTATIONAL SPEED n(r/min)
IMPELLER TIP SPEED U2(m/s)
VOLUME FLOW RATE Q(1000m³/h)
DYNAMIC PRESSURE Pd(10Pa)
OUTLET VELOCITY C(m/s)

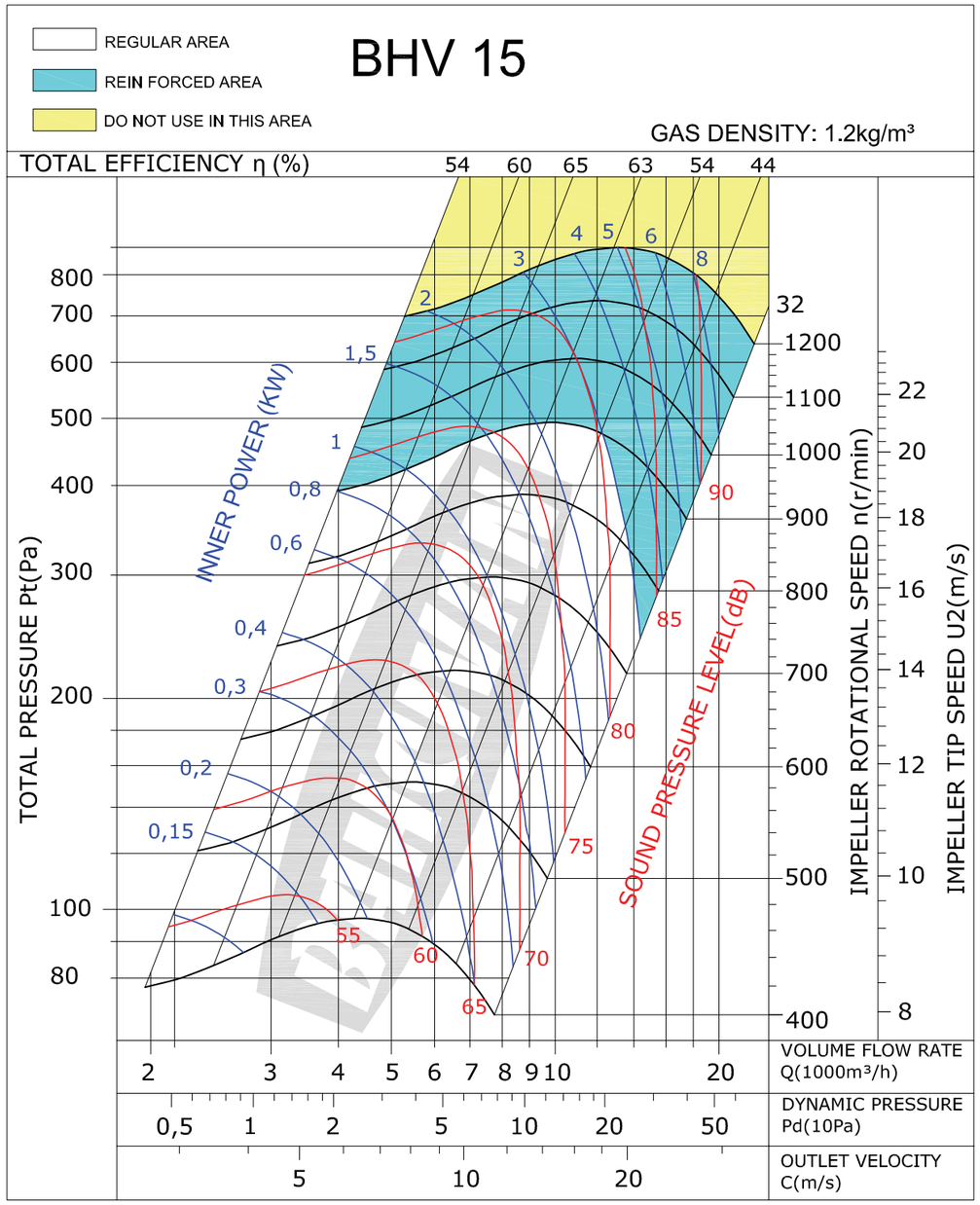
REGULAR AREA
REIN FORCED AREA
DO NOT USE IN THIS AREA
BHV 15
GAS DENSITY: 1.2kg/m³
TOTAL EFFICIENCY η (%)
54 60 65 63 54 44
TOTAL PRESSURE Pt(Pa)
INNER POWER (KW)
SOUND PRESSURE LEVEL(dB)
IMPELLER ROTATIONAL SPEED n(r/min)
IMPELLER TIP SPEED U2(m/s)
VOLUME FLOW RATE Q(1000m³/h)
DYNAMIC PRESSURE Pd(10Pa)
OUTLET VELOCITY C(m/s)

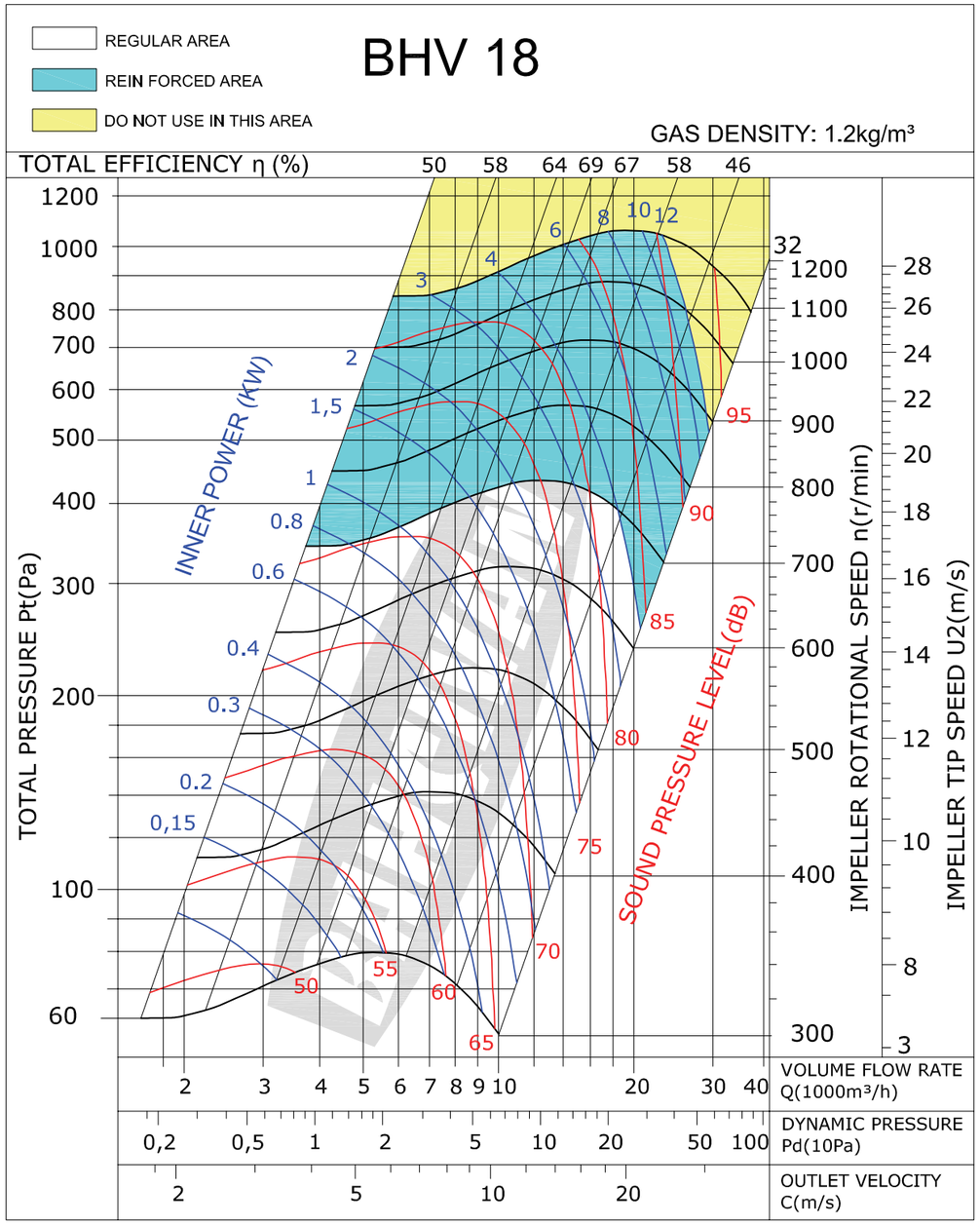
REGULAR AREA
REIN FORCED AREA
DO NOT USE IN THIS AREA
BHV 18
GAS DENSITY: 1.2kg/m³
TOTAL EFFICIENCY η (%)
50 58 64 69 67 58 46
TOTAL PRESSURE Pt(Pa)
INNER POWER (KW)
SOUND PRESSURE LEVEL(dB)
IMPELLER ROTATIONAL SPEED n(r/min)
IMPELLER TIP SPEED U2(m/s)
VOLUME FLOW RATE Q(1000m³/h)
DYNAMIC PRESSURE Pd(10Pa)
OUTLET VELOCITY C(m/s)